Gas Mass Flow Meter VC.1

Model MF / FS4000

久德電子 **TEL:**+886-4-23729418 **FAX:**+886-4-23724011 (40349)台中市西區福人街11號 www.jetec.com.tw

Gas Mass Flow Meter

with MEMS calorimetric sensing technology

MF / FS 4000 Series

User Manual

Document No. 06-2021-FM1 EN
Issue date: 2021.06
Revision: VC.1

久德電子
TEL:+886-4-23729418
FAX:+886-4-23724011
(40349)台中市西區福人街11號
Email: sales@jetec.com.tw

Attention!

- Please carefully read this manual prior to operating this product.
- Do not open or modify any hardware which may lead to irrecoverable damage.
- Do not use this product if you suspect any malfunctions or defection.
- Do not use this product for corrosive media or in a strong vibration environment.
- Use this product according to the specified parameters.
- Only the trained or qualified personnel shall be allowed to perform product services.

Use with caution!

- Be cautious for the electrical safety, even it operates at a low voltage, any electrical shock might lead to some unexpected damages.
- The gas to be measured should be clean and free of particles. Do not apply this meter for liquid medium.
- Do not apply for any unknown or non-specified gases that may damage the product.
- For remote data, please be sure the meter is properly configured.

Table of Contents

1. Overview

All contact information can be found at the end of this manual.

This manual provides essential information for the operation of the MF/FS4000 series of gas mass flow meter/sensors for general-purpose gas flow monitor and control applications with the full-scale mass flow rate from 2 to 50 SLPM with both analog and digital outputs. The product performance, maintenance, and trouble-shooting as well as the information for product order, technical support, and repair are also included.

MF/FS4000 mass flow meters/sensors are designed for general purpose precise industrial gas processing monitor and/or control. It can be applied for medical equipment such as anesthesia application, endoscope, and cancer treatment; industrial applications including welding machine, laser equipment, gas mixture; and many more. The series covers a wide dynamic flow range with a working pressure rating of up to 0.5 MPa (5 bar or 73 PSI), and a compensated temperature ranging from -10 to 55°C.

The products are designed with an easy change of mechanical connectors. The standard connectors are BSPT 1/4", and other customized ones are available upon request.

The products are operated with Siargo's proprietary MEMS calorimetric mass flow sensors together with smart control electronics. The sensor surface is passivated with silicon nitride ceramic materials together with a water/oil proof nano-coating for performance and reliability.

2. Receipt / unpack of the products

Upon receipt of the products, please check the packing box before the dismantlement of the packing materials. Ensure no damages during shipping. If any abnormality is observed, please contact and notify the carrier who shipped the product and inform the distributors or sales representatives if the order is not placed directly with the manufacturer, otherwise, the manufacturer should be informed as well. For any further actions, please refer to the return and repair section in this manual.

If the packing box is intact, proceed to open the packing box, and you shall find the product (either the meter with LED display or the sensor without the display per the actual order). The power and data cable as shown below may also be found according to the same packing materials.

Figure 2.1: MF/FS4000 flow meter

Figure 2.2: data cable

Please check immediately for the integrity of the product as well as the power and data cable, if any abnormal is identified, please notify the distributor/sales representative or manufacturer as soon as you can. If any defects are confirmed, an exchange shall be arranged immediately via the original sales channel. (Note: the LED display shall not be lighted up until the power cable is plugged in). This user manual shall also either be included in the packing box or via an online request for an electronic version. In most cases, this manual shall be made available to the customer before the actual order.

The standard cable has an AMPMODU MTE (5 positions) compatible connector with a length of 0.5 meters.

3. Knowing the products

3.1. Product description

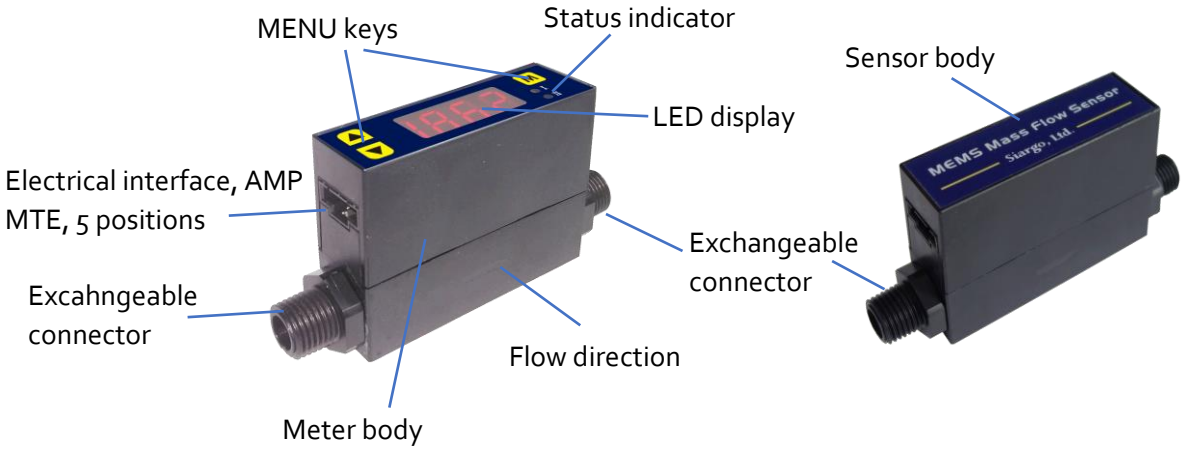

Figure 3.1: MF/FS4000 parts description

3.2. Power and data cable description

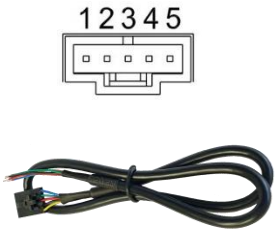

Figure 3.2: MF/FS4000 connection and cable

Table 3.1: MF/FS4000 pin/wire assignments.

Wire	Color	Definition
1	Blue	RS485B / RS232 TX
2	Green	Analog output, 0.5~4.5Vdc
3	Red	Power supply, 8 ~ 24Vdc
4	Black	Ground
5	Yellow	RS485A / RS232 RX

Note: 1. The standard cable has an AMPMODU MTE (5 positions) compatible connector with a length of 0.5 meters.

2. The RS485 Modbus is asynchronous, half-duplex communication. When the data are transmitted or received from the product, the other pin is serving as the ground.

3. The RS232 communication is bi-directional. TX is the transmit pin that sends data from the product. RX is the receive pin.

3.3. Mechanical dimensions

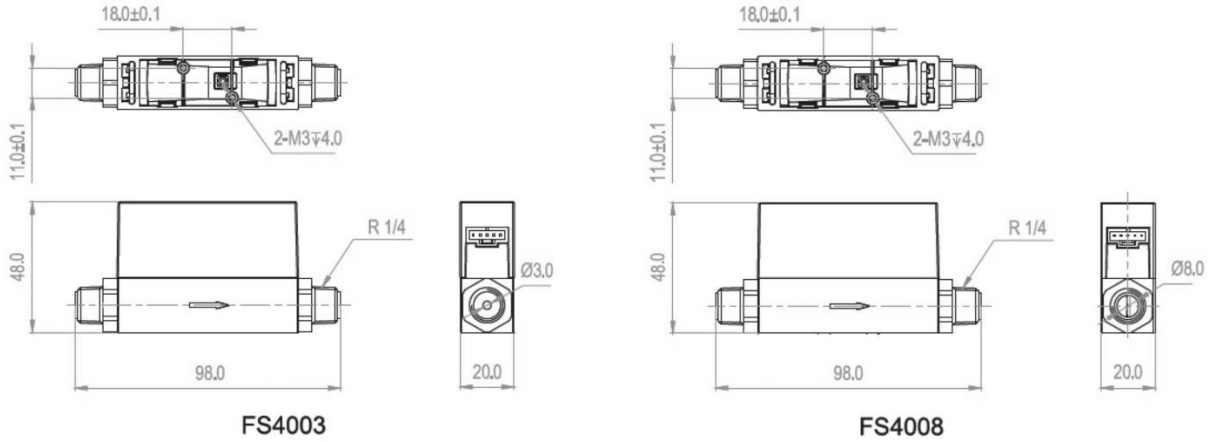

Figure 3.3: MF /FS4000 dimensions with BSPT (R1/4") connectors

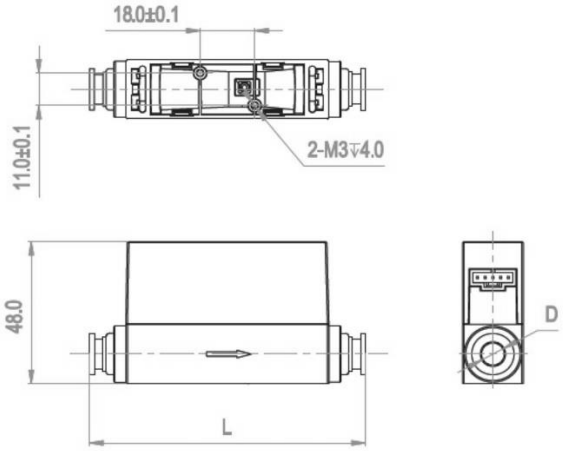

One-touch Connection	L	D
ID=8mm	91.0	Φ8.0
ID=6mm	83.0	Φ6.0
ID=4mm	80.0	Φ4.0

Figure 3.4: MF /FS4000 dimensions with one-touch connectors

Note: * Other threads or compressive types can be customized.

4. Installation

Do not open or alter any part of the product which would lead to malfunction and irrecoverable damage. It will also forfeit the terms of the warranty and cause liability.

The product at the time of shipment is fully inspected for its quality and meets all safety requirements. Additional safety measures during the installation should be applied. This includes, but is not limited to the leakage verification procedures, standard EDS (electrostatic discharge) precautions, DC voltage precautions. Other tasks such as calibration, part replacement, repair, and maintenance must only be performed by trained personnel. Upon request, the manufacturer will provide necessary technical support and/or training of the personnel.

There are no preferred space directions for the installation. Flow direction should be aligned with the arrow mark on the meter body. If the flowing fluid may have particles or debris, a filter is strongly recommended to be installed upstream of the meter.

Please follow the following steps to complete the installation:

a) Upon opening the package, the product's physical integrity should be inspected to ensure no visual damage.

b) Before installation of the product, please ensure that the pipe debris or particles or any other foreign materials are completed removed.

c) Close the upstream valve, if any, completely.

d) During installation, please make sure no foreign materials (such as water, oil, dirt, particles, etc.) entering into the installation pipeline.

e) Connect electrical wires per the wire definition in Table 3.1. Please be sure of the power supply range (i.e., 8 ~ 24 VDC) and power supply polarization. If an adapter is used, make sure the adapter meets industrial standards and has all safety certifications. Alternatively, this product can also be powered by a 9Vdc battery.

f) For the data communication wire connection, please follow the description in Table 3.1 and make sure that the wires are correctly connected to the proper ports on your data device/equipment. Please make sure the data cable meets industrial standards with proper shielding.

g) Once the external power is successfully connected, for the MF serial of meters, the LED should be lighted up with the proper information displayed.

h) Slowly open the valve(s) of the gas supply if any, upstream or downstream, or both of the pipeline. the product should then start to measure the flow in the pipeline. Note: because the meter has a large dynamical measurement range, it could be normal if you see the small instant

flow rate even if there is "no-flow" in the pipeline. If the value consistently present, double-check the pipe leakage and then reset the offset if you are sure there is no leakage or flow.

h) This will conclude the installation.

Cautions

a) Don't alter any parts of the product.

b) Ensure the electrical connection is properly done per the instructions.

c) Make sure no mechanical stresses in the connections.

d) The strong electromagnetic interference sources close by or any mechanical shocks at the pipeline may also create malfunctioning of the product.

e) Slowly open/close valves at the gas supply piping to prevent abrupt pulse flow impact.

5. Operation and MENU description

5.1 Check the product specifications

Before starting to use this product, check the product specifications that can be found in this manual or the basic information from the datasheet at the company's website

The detailed product technical specifications can be found in Section 7. For a specific application, the pressure rating must not be higher than the system pressure to be measured, and the flow range should also be within the specified ones. In most cases, the use of a high full-scale ranged meter for the very low flow rate measurement often results in erroneous data. The gas to be measured must also be consistent with that specified by the product. Be particularly cautious about the supplied voltage indicated in the specification. A higher voltage may lead to irrecoverable damage, and a lower voltage will not power the product for any desired functions.

For the best performance of the product, it is advised that the gas to be measured must be clean and free of particles or other foreign materials.

5.2 Check the leakage

Check gas leakage before any measurement. If it is needed, the pressurized nitrogen or air can be used for the leakage check.

5.3 Power the product and digital data connection

Although this product complies with the CE-required EMC regulations, it also requires the product to be used according to the standard electrical device practice. Before connecting the product with external DC power or an AC-DC adapter, make sure the supply voltage is within the range of the specified ones in Section 7. Be cautious that the standard electrical device precautions such as EDS (electrostatic discharge) and DC voltage are observed. Excessive electrostatic discharge may damage the product.

The manufacturer-supplied power and data cable have a locking fixture. Lock the cable and make sure it is properly engaging and will not be accidentally got unplugged.

Half-duplex RS485 Modbus or RS232 is used for digital data communication. Make sure the wires are properly connected to the receiver side.

5.4 Meter display and MENU descriptions

Please skip this section for flow sensor products.

5.4.1. Meter display and function keys

Figure 5.1: MF4000 display and function keys

The meter has a front 3-key board for the user to set the desired functions, access data, and check for the status. The Menu key (M) is at the upper right position that allows the user to select a function and confirmation or other related actions that will be detailed described in the MENU key sequence graphic presentation. Two keys ("Up" and "Down") are used to select the functions. The two LED lights (I and II) are used for the indication of display contents. For the default instant flow rate display, both of these two LEDs will be off. Please refer to the detailed information below.

The default instant flow rate is SLPM with 4 digits, one of the digits is a decimal. When the flow rate is above the specified flow range, LED I will flash for the flow rates above the upper limit, and LED II will flash for the flow rates below the lower limit. If both LEDs are flashing, the displayed values are incorrect.

Once the power is supplied and no abnormal issues are observed, the meter is ready to perform the measurements. While the LED displays the instant mass flow rate, the accumulated or totalized flow rate can be accessed by press the "Up" or "Down" key. The accumulated flow rate is registered with "standard liter" (SL), and the maximum can be 99,999,999 SL. The first four digits of the accumulated flow rate are indicated by the "I" LED light, and the last four digits are represented when the "II" LED light is on. The "I" and "II" LED lights will be automatically switched when the accumulated flow rate is displayed. The accumulated flow rate will be automatically saved every three minutes. At the time of the power failure or cut-off, the value will be representing the latest saved ones.

5.4.2. MENU function input sequence

At the flow measurement (main) display, press the three MEMU keys, it will allow the user to perform a variety of settings of the product. The following graph details the key sequence for each function, and some detailed explanations are followed after the graphic presentation.

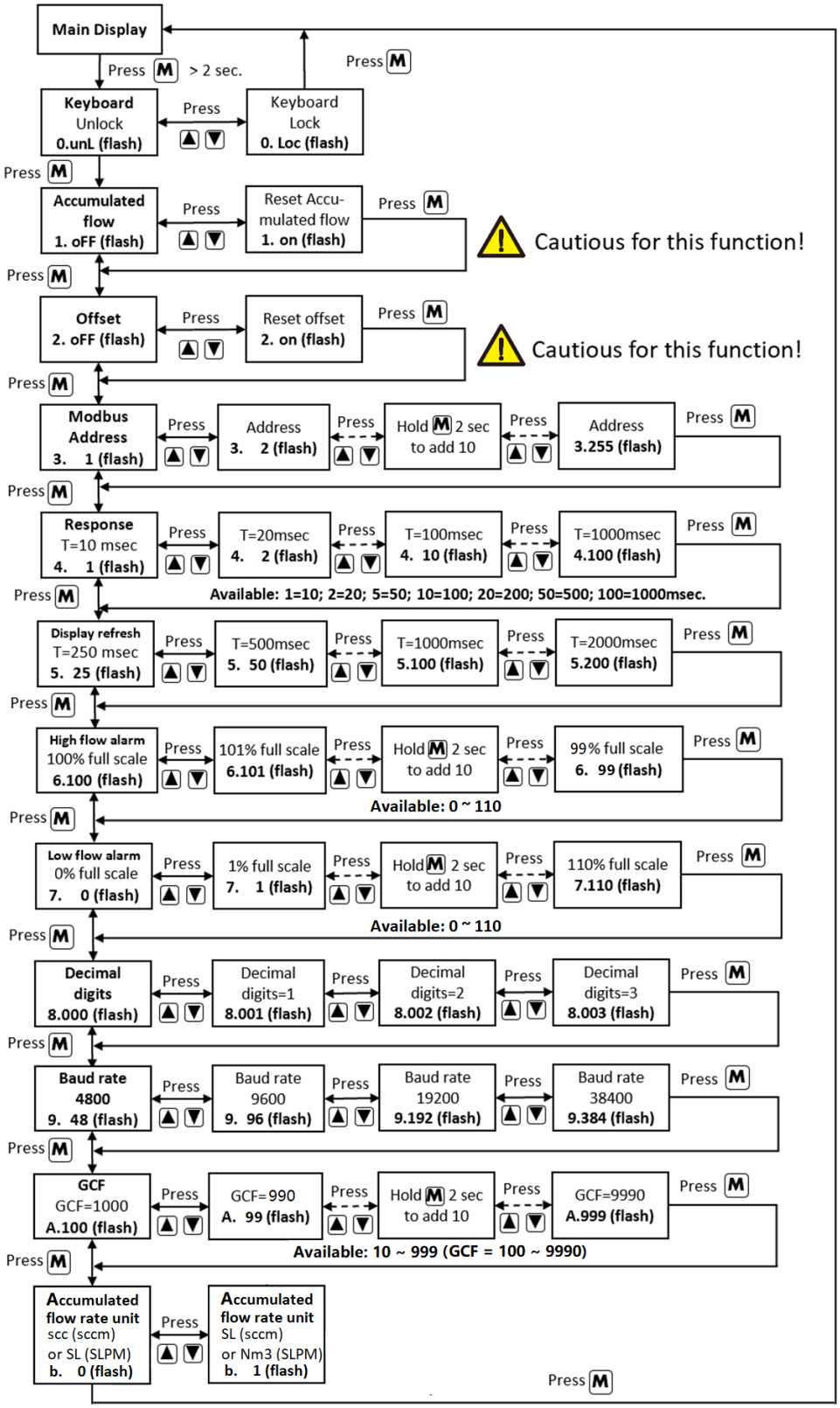

Figure 5.2: MF4000 menu flow chart

Table 5.1: On-screen characters and their corresponding functions

On-screen character	Symbol	Functions
0.unL / 0.Loc	0.unL / Loc	Unlock/lock the keyboard
1.oFF / 1. on	1.oFF / on	Reset the accumulated flow
2.oFF / 2. on	2.oFF / on	Reset or calibrate the offset
3. 1 / 3.255	3. 1 … 255	Set the Modbus address Available: 1 ~ 255, The default address is 1.
4. 1 / 4.100	4. 1 / 2 / 5 / 10 / 20 / 50 / 100	Set the response time
5. 25 / 5.200	5. 25 / 50 / 100 / 200	Set the display refresh rate
6. 100 / 6. 110	6. 0 … 110	Set the upper flow rate alarm **Available:** 0 ~ 110, means of 0% ~ 110% full scale. The default value is 100 (100% full scale).
7. 0 / 7. 110	7. 0 … 110	Set the lower flow rate alarm **Available:** 0 ~ 110, means of 0% ~ 110% full scale. The default value is 0 (0% full scale).
8. 0 / 8. 3	8. 0 / 1 / 2 / 3	Set the display decimal
9. 48 / 9.384	9. 48/ 96/192/384	Set the communication baud rate **Available:** 48, 96, 192, 384, means of baud rate 4800, 9600, 19200, 38400. The default value is 384 (baud rate 38400).
A. 100 / A.999	A. 10 … 999	Set the GCF (gas conversion factor) **Available:** 10 ~ 999, means of GCF = 100 ~ 9990. Default value is 100, means of GCF = 1000.
b. 0 / b. 1	b. 0 / 1	Set the accumulated flow rate unit. ➢ scc or SL (instant flow rate unit is sccm); ➢ SL or Nm^3 (instant flow rate unit is SLPM).

Note: During this process, the meter will continue to measure the flow without being interrupted.

5.4.3. Detailed descriptions of the functions

0) Keyboard security

This function allows the user to disable the keyboard entry after the meter is set as desired. It will prevent any accidental key entry that may alter the settings. At the MENU, select "lock" to lock the keyboard.

1) Reset the accumulated flow rate

The maximum accumulated flow rate that can be registered by the meter is 99,999,999 SL. Once the value is reached, the accumulating function will stop processing the data. It is necessary to reset the register for the continuation of this function.

Use this function with caution as it will delete all current accumulated flow rate data.

2) Reset or calibrate the offset

Sometimes or after a long time of use (i.e., over 1 year of usage), the sensor surface could have a thin deposit from the environment if the gas is not super clean. Depending on the actual case, this deposit might or might slightly change the thermal sensitivity of the sensor resulting in a drift of the offset or a tiny flow at the zero flow in the pipeline. Use this function to reset the offset will not have an impact on the meter performance if such an offset is outside of the 100:1 calibrated range.

Use this function with caution and make sure there is no flow when executing this function, otherwise, it may incur some additional errors to the measurement.

3) Set the Modbus address of the meter

Use this function to set the RS485 Modbus address of the meter. This setting can also be done via the RS485 communication.

4) Set the response time

Use this function to change the response time of the meter. The default one is 10 msec. Increasing the response time will allow more data to average and output a stabler flow rate if the actual flow rate may have some undesired fluctuation.

Available response time is 10 msec (4. 1); 20 msec (4. 2); 50 msec (4. 5); 100 msec (4. 10); 200 msec (4. 20); 500 msec (4. 50), and 1000 msec (4.100)

5) Set the display refresh rate

Change the display refresh rate will just alter the display update time, it will have no impact on the meter's measurement. The default refresh rate is 250 msec.

Available refresh rates are 250 msec (5. 25); 500 msec (5. 50); 1000 msec (5.100), and 2000 msec (5.200).

6) Set the upper flow rate alarm

This function allows the user to set a maximum allowable flow rate above which an alarm will be triggered with a flashing screen.

7) Set the lower flow rate alarm

This function allows the user to set a minimum flow rate below which an alarm will be triggered with a flashing screen.

8) Set the display decimal

The user can use this function to alter the default one decimal display. Options are listed below for each flow range:

Table 5.2: decimal options

Flow range	Decimal options
0 ~ 2, 3, 4, 5 SLPM	0, 1, 2, 3
0 ~ 10, 20, 30, 40, 50 SLPM	0, 1, 2

9) Set the communication baud rate

This function allows a MENU entry of the RS485 or RS232 communication baud rate.

10) Set the GCF (the gas conversion factor)

The meter is normally calibrated with air at 20°C and 101.325 kPa. When the user wants to set the standard conditions other than the specified temperature or applies the meter for other allowable gases (please contact the manufacturer for the list of gases), it is possible to use this gas conversion factor function to ensure the readings are correct and desired.

The default value of the GCF is 1000 (1.000). For example, if one wants to alter the standard temperature to 0°C, the factor can be calculated using the gas equation: PV/T = constant:

GCF = 1000 x V(new) / V (20°C) = T (0°C) / T (20°C) = 1000 x 273 / 293 = 932

Then the gas conversion factor would be 932.

In some cases, the actual system may have a constant deviation from that at the calibration, this GCF can also be used to adjust. For additional information, please contact the manufacturer.

11) Set the accumulated flow rate unit.

When the instant flow rate unit is sccm, the accumulated flow rate unit can be set to scc or SL;

When the instant flow rate unit is SLPM, the accumulated flow rate unit can be set to SL or Nm^3.

5.5 RS485 Modbus / RS232 communication protocol

The digital communication protocol is based on standard Modbus RTU Half-plex mode or the RS232 communication protocol. A master (PC or PLC) can communicate with multiple slaves (the current product) for data exchange and communication parameter configuration. Refer to Table 3.2 for cable connection. RS232 only supports single-meter communication, and Flow control is always NONE.

5.5.1. Hardware connection

The RS485 hardware layer is TIA/EIA-485-A, as illustrated below. In this configuration, the product (MF/FS4000) is a slave.

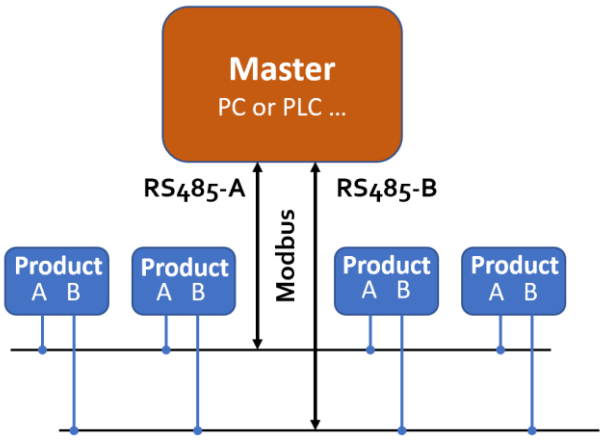

Figure 5.3: RS485 hardware

5.5.2. Communication parameters

The PC UART communication parameters are listed in table 5.3.

Table 5.3: PC UART communication parameters

Parameters	Protocol
	RTU
Baud rate (Bits per second)	38400 bps
Start bits	1
Data bits	8
Stop bits	1
Even/Odd parity	None
Bits period	104.2 µsec
Bytes period	1.1458 msec
Maximum data length	20
Maximum nodes	247

5.5.3. Frame

The frame function is based on the standard Modbus RTU framing:

Table 5.4: frame function

Start_bits	Address	Function codes	Data	CRC	Stop_bits
T1-T2-T3-T4	8 bit	8 bit	N 8 bit (20≥n≥0)	16 bit	T1-T2-T3-T4

Start_bits: 4 periods bit time, for a new frame.

Address: The address can be set from 1 to 255 except for 157 (0x9d). 0 is the broadcast address.

Function codes: Define the product's functions/actions (slaves), either execution or response.

Data: The address of the register, length of data, and the data themselves.

CRC: CRC verification code. The low byte is followed by the high byte. For example, a 16 bit CRC is divided into BYTE_H and BYTE_L. In the framing, the BYTE_L will come first, then followed by the BYTE_H. The last one is the STOP signal.

Stop_bits: 4 periods bit time, for ending the current frame.

5.5.4. Function codes

The Modbus function codes applied for the product are the sub-class of the standard Modbus function codes. These codes are used to set or read the registers of the product:

Table 5.5: function codes

Code	Name	Functions
0x03	Read register	Read register(s)
0x06	Set single register	Write one single 16-bit register
0x10	Set multiple registers	Write multiple registers

5.5.5. Registers

The product (MF4600) has multiple registers available for the assignment of the various functions. With these functions, the user can obtain the data from the products, such as *product address* and *flow rates* from the registers, or set the product functions by writing the corresponding parameters.

The currently available registers are listed in the following table, and the registers may be customized upon contact the manufacturer. Where R: read; W: write-only; W/R: read and write.

Note: At the time of shipping, the write protection function is enabled except for address and baud rate. Once the user completes the register value change, the write protection will be automatically enabled once again to prevent incidental data loss.

Table 5.6: Registers

Functions	Description	Register	Modbus reference
Address	Product address (R/W)	0x0001	40002 (0x0001)
Flow rate	Current flow rate (R)	0x0002 ~ 0x0003	40003 (0x0003)
Totalizer	Totalizer or accumulated flow rate (R)	0x0004 ~ 0x0006	40005 (0x0005)
Baud rate	Communication baud rate (R/W)	0x0015	40022 (0x0015)
Gas conversion factor	Gas conversion factor (R/W)	0x0016	40023 (0x0016)
Response time	Response time or sampling time (R/W)	0x0017	40024 (0x0017)
Offset reset	Reset or calibrate offset (R/W)	0x0027	40040 (0x0027)
High flow alarm	Set high flow rate alarm (R/W)	0x0031	40050 (0x0031)
Low flow alarm	Set low flow rate alarm (R/W)	0x0033	40052 (0x0033)
Write protect	Disable a specific parameter entry (W)	0x0014	40021 (0x0014)

The detailed information of each register is described below: Y: enabled; N: disabled

Address	**0x0001**	**Write**	Y
		Read	Y
Description	Address of the product		
Value type	UINT 16		
Notes	Values from 1 to 255 except for 157 (0x9d). 0 is the broadcast address.		

Flow rate	**0x0002 ~ 0x0003**	**Write**	N
		Read	Y
Description	Current flow rate		
Value type	UINT 16		
Notes	Flow rate = [Value (0x0002)*65536 + value (0x0003)]/1000 e.g.: for a flow rate of 123.456 SLPM, the user will read "1 (0x0001)" from register 0x0002 and "57920 (0xE240)" from register 0x0003, therefore Current flow rate = (1*65536+57920)/1000 = 123.456		

Totalizer	**0x0004 ~ 0x0006**	**Write**	Y
		Read	Y
Description	Totalizer or accumulated flow rate		
Value type	UINT 32 + UINT 16		
Notes	A1 = Value (0x0004) * 65536 + Value (0x0005) A2 = Value (0x0006) Totalizer or accumulated flow rate = (A1 * 1000 + A2)/1000 e.g.: for a totalizer or accumulated flow rate of 3452.245 m^3, the user will read "0 (0x0000)" from register 0x0004; "3452(0x0D7C)" from register 0x0005, and "245(0x00F5)" from register 0x0006. Then, the totalizer or accumulated flow rate = ((0 + 3452)*1000 + 245)/1000=3452.245.		

Baud rate	**0x0015**	**Write**	Y
		Read	Y
Description	Communication baud rate		
Value type	UINT 16		
Notes	Value=0: 4800; 1: 9600; 2: 19200; 3: 38400. The default value is 3.		

Gas conversion factor	**0x0016**	**Write**	Y
		Read	Y
Description	Gas conversion factor		
Value type	UINT 16		
Notes	The value is 1000 times the calculated value. The value is used to change the reference conditions, adjust the system deviation, and calibrations for		

	different gases. **It is recommended that write protection should be applied after this value is changed.**

Response time	**0x0017**	**Write**	Y
		Read	Y
Description	Meter response or data sampling time		
Value type	UINT 16		
Notes	The default value is 10 (10 msec). Options are 10, 20, 50, 100, and 200 msec. **It is recommended that write protection should be applied after this value is changed.**		

High flow alarm	**0x0031 ~ 0x0032**	**Write**	Y
		Read	Y
Description	Set the high flow rate alarm limit		
Value type	UINT 16		
Notes	The set flow rate value = ((0x0031)*65536+(0x0032))/1000		

Low flow alarm	**0x0033 ~ 0x0034**	**Write**	Y
		Read	Y
Description	Set the low flow rate alarm limit		
Value type	UINT 16		
Notes	The set flow rate value = ((0x0033)*65536+(0x0034))/1000		

Offset reset	**0x0027**	**Write**	Y
		Read	N
Description	Reset or calibrate the offset		
Value type	UINT 16, fixed value 0xAA55		
Notes	Send the fixed value 0xAA55 to register 0x0027. **Please make sure there is no flow before executing this command.**		

Write protection	**0x0014**	**Write**	Y
		Read	N
Description	Write protection of a specific value		
Value type	UINT 16, a fixed value of 0xAA55		
Notes	This function disables the write-protected register and allows you to modify the corresponding register's value. For example, to change the gas conversion factor, the user needs to send 0xAA55 to the register 0x0016, and then the write function will be enabled (write protection is disabled). After the write execution is completed, the firmware will automatically re-enable the write protection.		

5.6 Analog output (0.5 ~ 4.5Vdc)

The product offers a voltage analog output of the instant flow rate. Refer to Table 3.1 for the wire connection for this output. The meter is calibrated to 110% of the specified full-scale flow rate. The typical analog output is indicated below. This over range applies to both analog and digital output.

Table 5.7: MF4000 analog output

Flow rate	Analog output (Vdc)
0.00	0.50
10 % F.S.	0.90
20 % F.S.	1.30
40 % F.S.	2.10
50 % F.S.	2.50
70 % F.S.	3.30
90 % F.S.	4.10
100 % F.S.	4.50
110 % F.S.	4.90
120 % F.S.	4.90

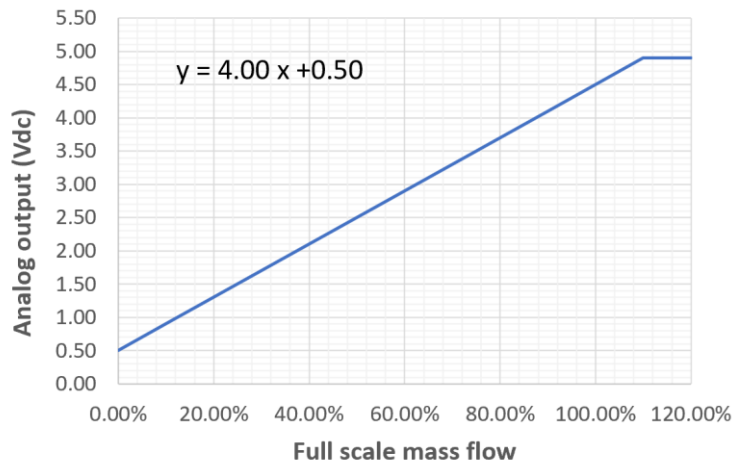

Figure 5.4: MF/FS4000 analog output

5.7 Pressure loss

The product is designed for low-pressure loss. The major drop of the pressure is at the manual valve structure. The following graph illustrated the pressure losses of the selected models.

Table 5.8: MF/FS4008 pressure loss

Flow rate (sccm)	Pressure loss (Pa / PSI)
0.0	**0 / 0**
5.0	**8 / 0.001**
10.0	**25 / 0.004**
20.0	**90 / 0.013**
30.0	**200 / 0.029**
40.0	**370 / 0.054**
50.0	**580 / 0.084**

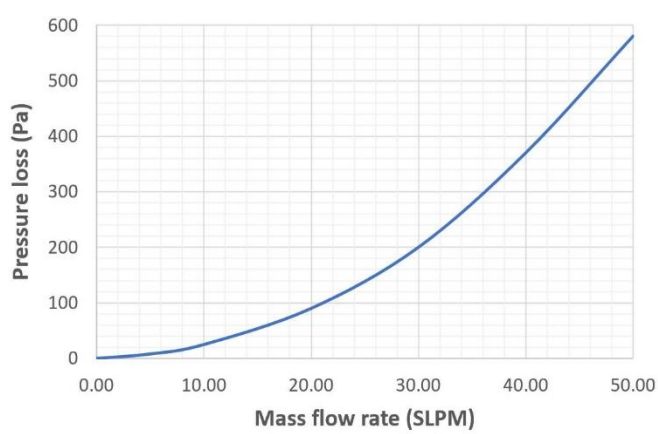

Figure 5.5: MF/FS4008 pressure loss

Table 5.9: MF/FS4003 pressure loss

Flow rate (SLPM)	Pressure loss (Pa / PSI)
0.0	**0 / 0**
1.0	**6 / 0.001**
2.0	**15 / 0.002**
3.0	**30 / 0.004**
4.0	**55 / 0.008**
5.0	**95 / 0.014**

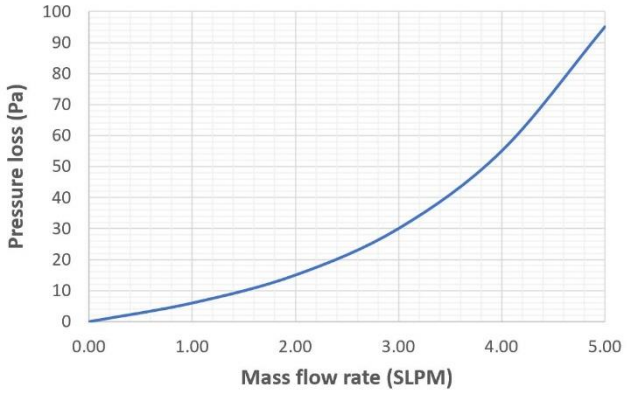

Figure 5.6: MF/FS4003 pressure loss

6. Product selection and order information

6.1 Product selection

The product part number is composed of the product model number and suffixes indicating the full-scale flow rate, as well as the other parameters. Refer to the following for details.

MF/FS40 □ - □ - □ - □ - □

- Gas (A – air; B – N_2O; C – CO_2; N – N2; O – O2; R- Ar, for other gases, please contact the manufacturer.
- Output: B – RS485; C – RS232; V – 0.5 ~ 4.5 Vdc.
- Mechanical connection: R-R1/4"; O4/6/8 one-touch
  MF/FS4003: R, O4, O6, O8 available
  MF/FS4008: R. one-touch is not recommended.
- Maximum full scale flow rate (for the value refer to the table below). If the unit is not SLPM or sccm, the unit needs to be specified here.
- DN (pipe diameter: 03 or 08)

6.2 Order contact and customer support

The sales offices and the sales distributors/representatives are listed at the end of this document. For small quantities, the order can be placed either through the.For large quantities, please contact the sales office, distributors, or sales representatives.
We are making every effort to ensure the quality of the products. In case of questions and/or product supports, please contact the customer service listed at the end of the document.

7. Technical specifications

All specifications listed in the following table unless otherwise noted apply for calibration conditions at 20°C and 101.325 kPa absolute pressure with air. The product is horizontally mounted at the time of calibration.

	Value	Unit
Full-scale flow range	2… 5 (4003) / 10…50 (4008)	
Accuracy	±(1.5+0.2FS)	%
Repeatability	0.25	%
Turn-down ratio	100:1	
Working temperature	-10 ~ 55	°C
Temperature coefficient	±0.12	%/°C
Maximum pressure	0.5	MPa
Response time	10 (default, 50 … 1000 programmable)	msec
Filter depth	0 (default, 4…255 programmable)	msec
Humidity	<95, no condensation	%RH
Power supply	8 ~ 24 (50 mA)	Vdc
Analog output	0.5~4.5	Vdc
Null shift	±30	mVdc
Analog output load	Sourcing: 14; Sinking: 11	mA
Digital output	RS485 Modbus half-duplex / RS232	
Max. overflow	30 (4003) / 200 (4008)	SLPM
Max. flow change	4 (4003) / 30 (4008)	SLPM/sec
Electrical connector	AMPMODU MTE 5 positions	
MENU access (MF serial)	3 key – front face keyboard/digital	
Display (MF serial)	Instant flow rate, totalizer, or accumulated flow rate with LED & 2 indicators	
Mechanical connection	BSPT; One-touch or customized	
Protection	IP40	
Storage temperature	-20 ~ 70	°C
Reference conditions	20°C, 101.325 kPa, air	
Fluid compatibility	Non-corrosive	
CE	EN61000-2; -3; -4	
RoHS/REACH	Certified	

8. Technical notes for the product performance

8.1 Measurement principle

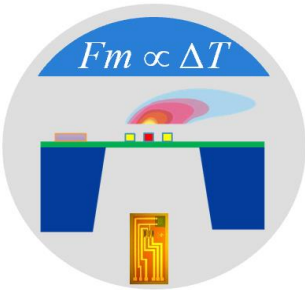

Figure 8.1. Measurement approach illustration.

The products utilize the Company's proprietary micro-machined (MEMS) calorimetric sensing and data process technology. A thermal signal generator with a pair of sensing elements at the up and downstream of the microheater is precisely manufactured and separated at predefined micrometer distances on a chip surface with excellent thermal isolation. When a fluid is flowing through the sensing chip, the fluid carries the thermal signal downstream. The sensing elements register the temperature differences, further correlated to the fluid mass flow rate via the calibration process.

The calorimetric sensing approach offers a large dynamic range with a better performance against the environmental parameter alternations. Please refer to the company's US patents and other publications made available to the public for additional information.

8.2 Precautions for the best performance of the product

8.2.1. Comparison with a third party reference meter

It is very common that a user may compare the data from the product with a third-party reference meter, and in many cases, there could be some discrepancies.

When performing such a comparison, please note that the reference meter should have a better-specified accuracy (about 1/3 of the product), and pay special attention to the differences in the reading accuracy and full-scale accuracy.

A full scale accuracy = reading accuracy x (full scale flow rate/ set point (current) flow rate)

Another key point to compare the different flow meter is that as long as the fluidic flow is a continuous flow without pulsation, then the fluidic dynamic will have the system following the Bernoulli equation:

$$P_1 + \frac{1}{2}\rho v_1^2 + \rho g h_1 = P_2 + \frac{1}{2}\rho v_2^2 + \rho g h_2$$

where ρ is the fluid density; g is the acceleration due to gravity; P_1 is the pressure of the reference meter; P_2 is the pressure at the test meter; v_1 is the velocity of the reference meter, and v_2 is the velocity of the test meter. h_1 and h_2 are the corresponding height for the meters which in most cases is the same in the system. Therefore, it would be very critical to have the system does not have a

pressure variation. (This explains our recommendations for the installations in Section 4). Also, the meter measurement principle is often very important for the understanding of any discrepancies.

Please note for comparison with a rotameter, the reading could have large deviations due to the different measurement principles, in particular as rotameter is sensitive to pressure and temperature variations.

8.2.3. Particle contamination and fluidic cleanness

Any contamination including particles and liquid vapors would be detrimental to the accuracy of the flow measurement and also to the meter functionality. It is important to ensure the applied flow medium will be clean and dry. If any contamination is suspected, please allow experienced technical personnel to have it checked and re-conditioned. Do not use a foreign cleanser or other fluids to clean the flow path which could bring irrecoverable damage.

8.2.4. Apply to a different gas medium

The product is calibrated with a high precision NIST traceable metrological standard with clean and dry air. In case the meter will be applied to meter the other clean and dry gas, a correct gas conversion factor needs to be registered into the meter before the measurement.

The meter operates similarly to the principle described in the international standard for thermal mass flow meters (ISO 14511:2001 - Measurement of fluid flow in closed conduits — Thermal mass flowmeters). Due to the meter assembled procedure, the head loss value from the meter to the meter would not be 100% identical, and at the large dynamic measurement range, the thermal response would also have some deviations and nonlinearity from gas to gas. Therefore, measurement by the meter for a gas medium other than the calibration gas would bear larger measurement errors, particularly at the low Reynold number range where the laminar flow has a sensitive flow profile.

9. Troubleshooting

Phenomena	Possible causes	Actions
No signal / display	Power not connected; battery empty	Connect the power, check the cable
	Cable connection incorrect	Check cable
	No flow or clogging	Check flow and contamination
	Power regulator failure	Return to factory
	Sensor failure	Return to factory
Large errors or unexpected flow rate	Particles, fluid type	Check system
Erroneous or large noise	Vibration, unstable flow	Check system
Valve not work	Wire connection, valve	Return to factory
Offset unstable	Circuitry instability	Check system, power off
No digital interface	Wrong address, software	Check commands, connection
No wireless, BT cannot pair	Wrong model, data jam	Check model, power off/on

10. Service contact

Is making every effort to ensure the quality of the products. In case of questions, and or product supports, please contact customer service at the address listed below. We will respond to your request in a timely fashion and will work with you toward your complete satisfaction.

Customer service and all orders should be addressed to

久德電子
TEL:+886-4-23729418
FAX:+886-4-23724011
(40349)台中市西區福人街11號
Email: sales@jetec.com.tw

For orders, please provide an accurate and full postal address.